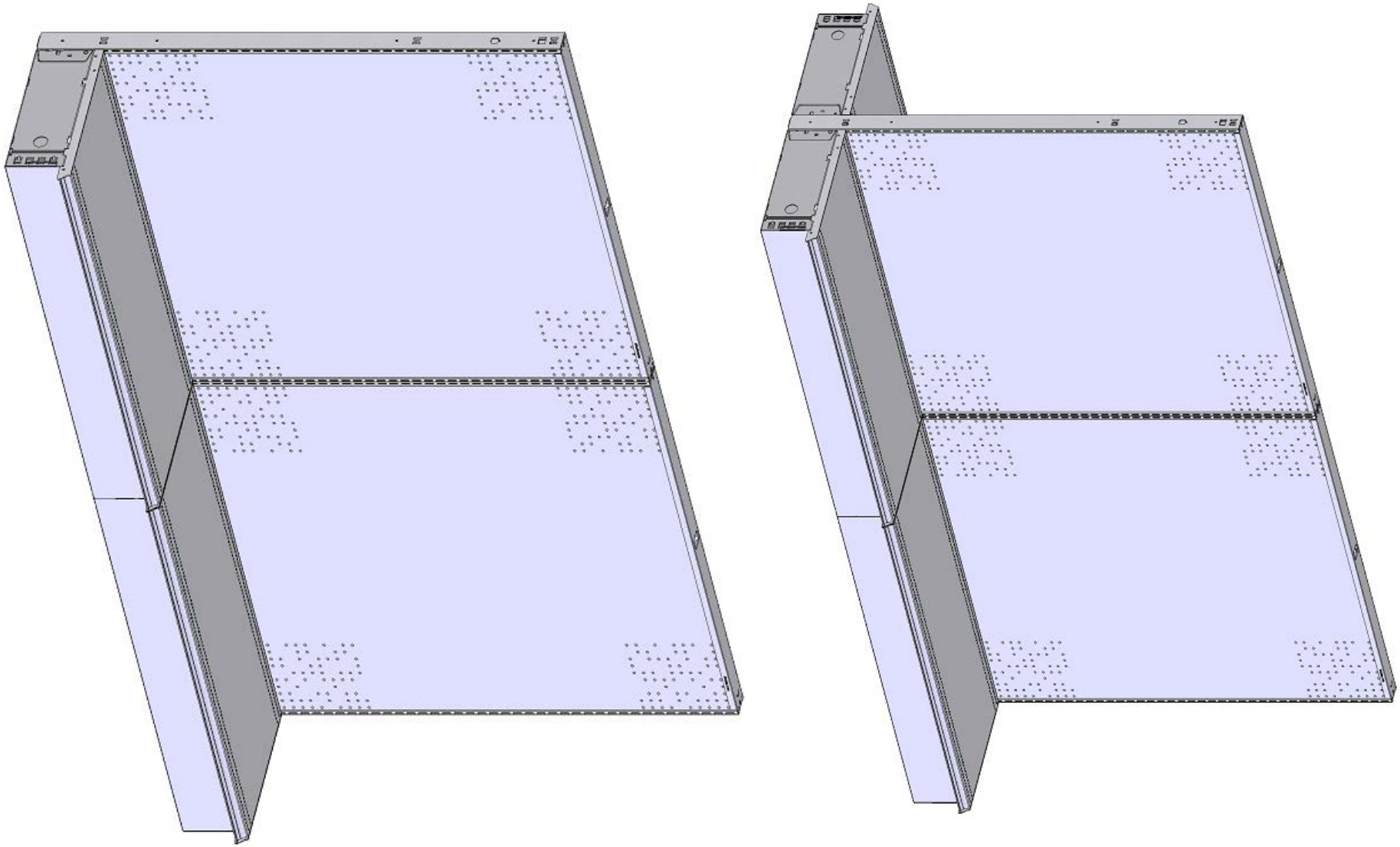

STREATER
A Marmon Retail Services® Company

R03-28-06 - Form No.08335-0106

ULTRA 25K GONDOLA / WALLCASE ASSEMBLY

PART IDENTIFICATION

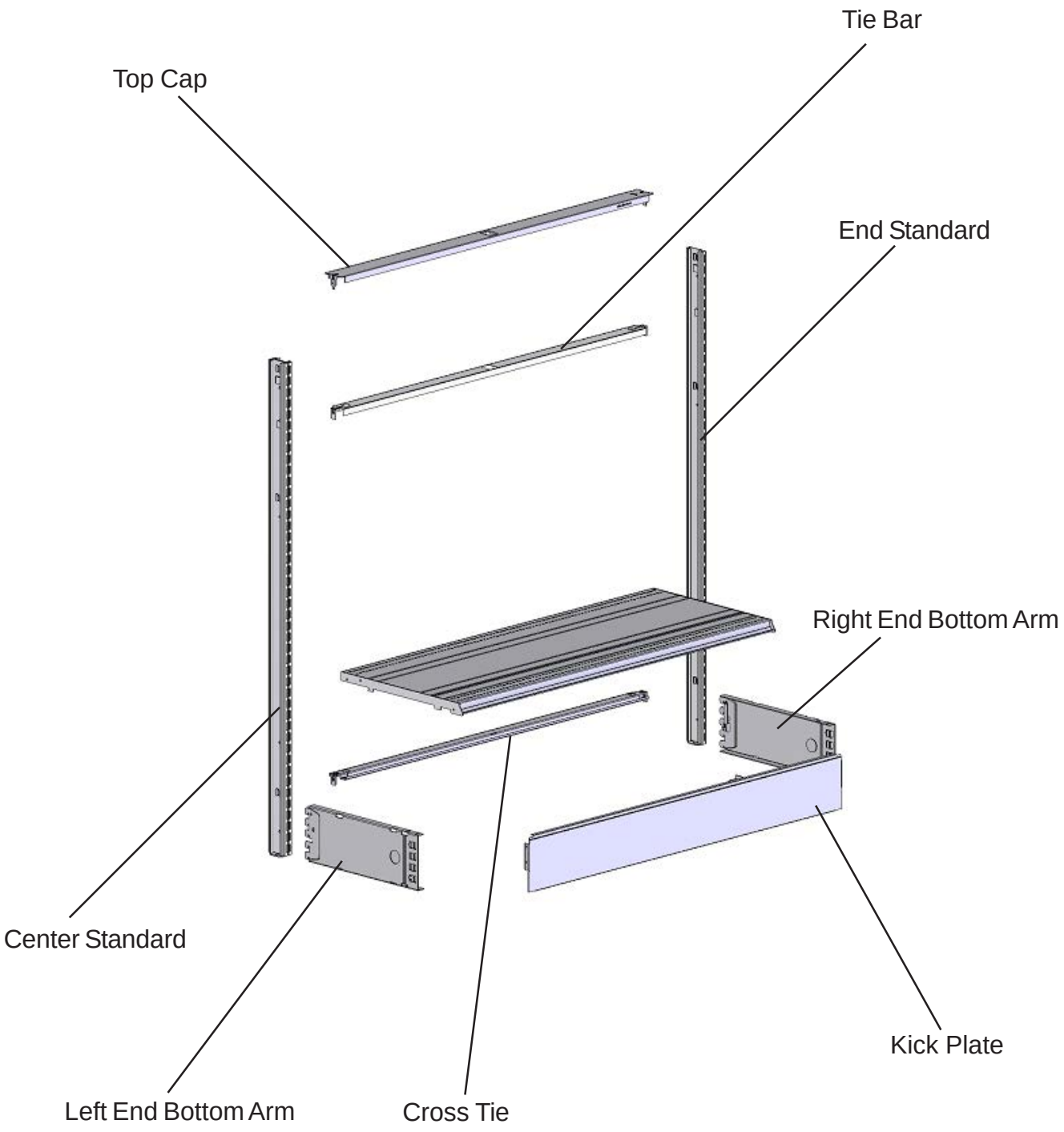

PART IDENTIFICATION

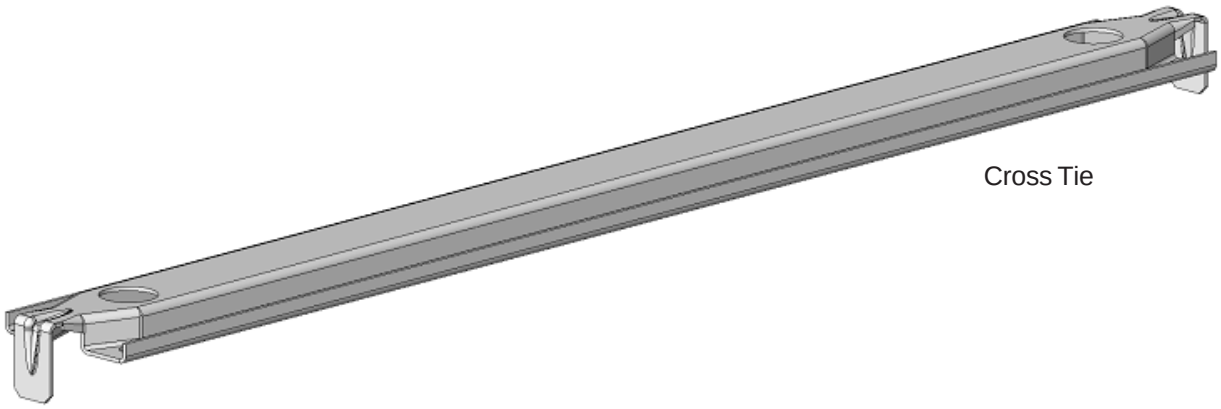

Cross Tie

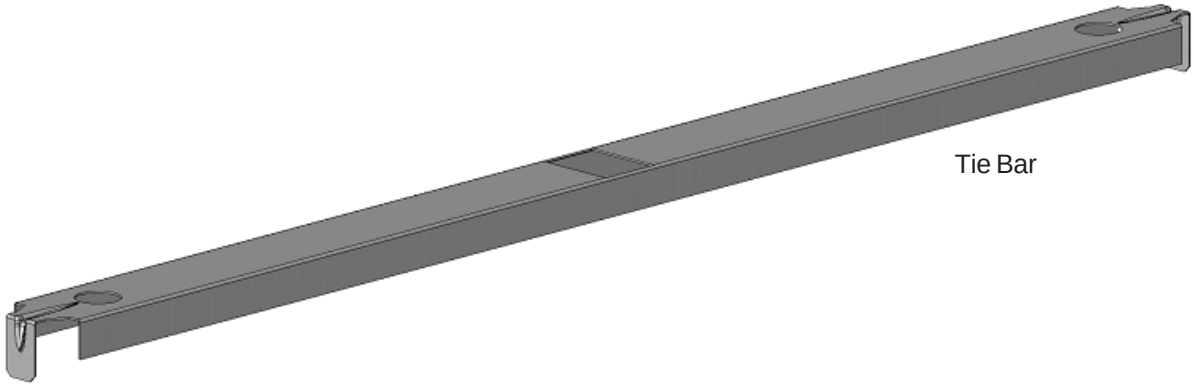

Tie Bar

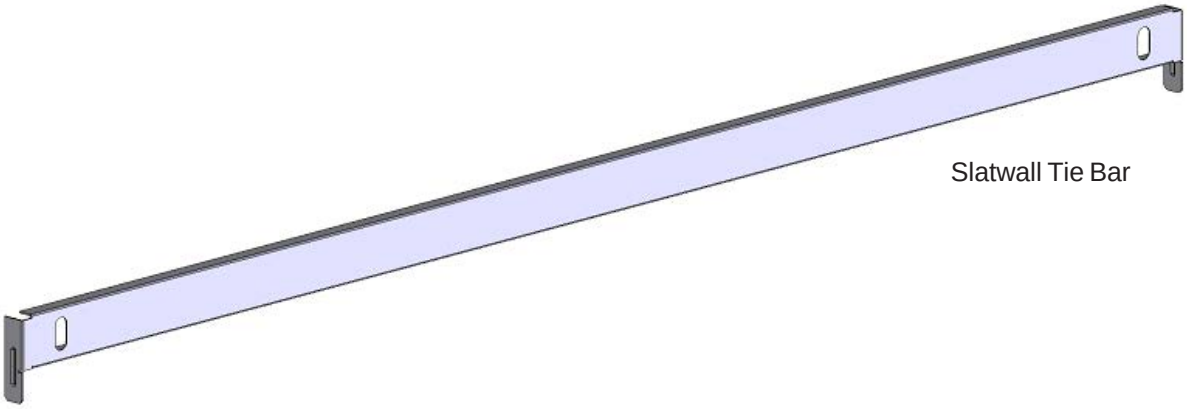

Slatwall Tie Bar

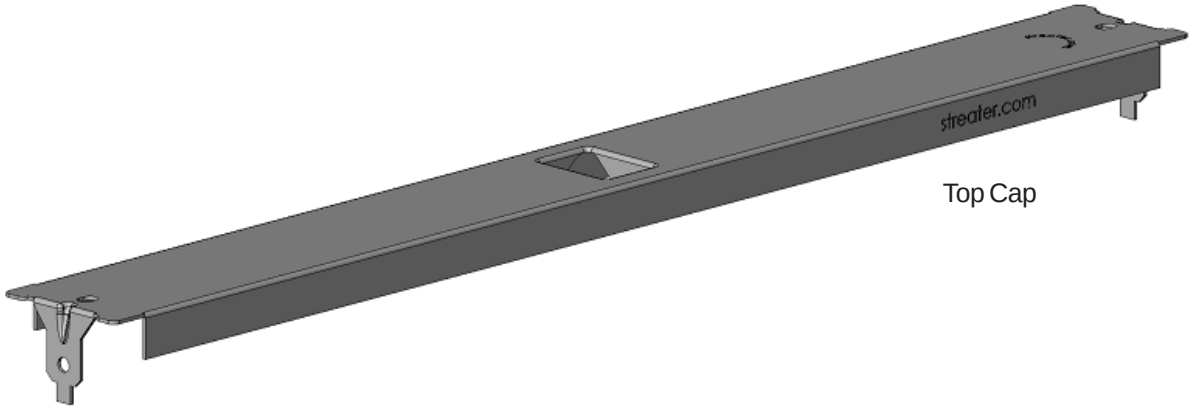

Top Cap

ULTRA 25K GONDOLA ASSEMBLY

Bottom arms, cross tie, tie bar

1

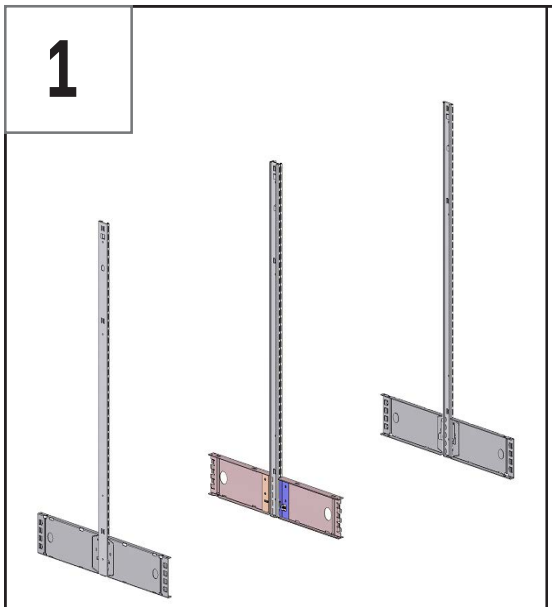

With the left upright (smooth side out) in hand, take the left hand bottom arm (smooth side out) then slide it into the upright and push down to seat the hooks.

To lock the bottom arm into place use a mallet and tap the locking key into the corresponding slot in the upright.

Repeat step with right side components.

Unlocked

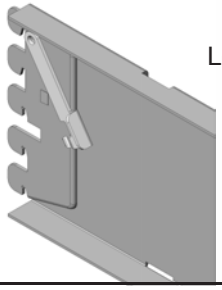

Locked

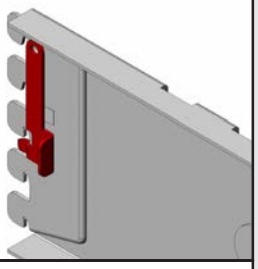

2

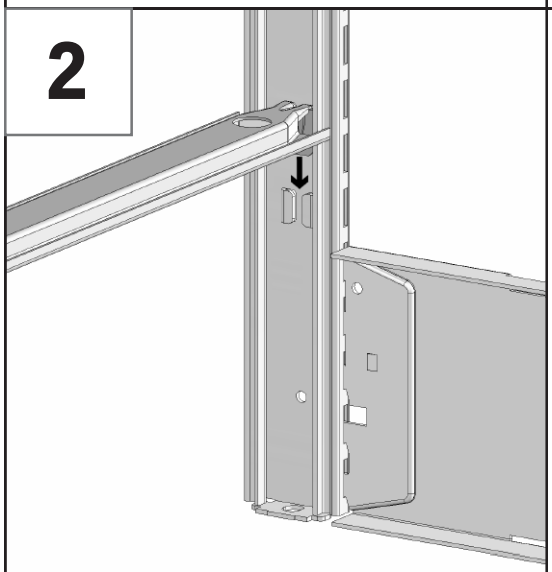

Slide the cross tie into place on one upright and then the other as pictured to the left.

Note: With your mallet tap the cross tie directly over the tab to properly seat it.

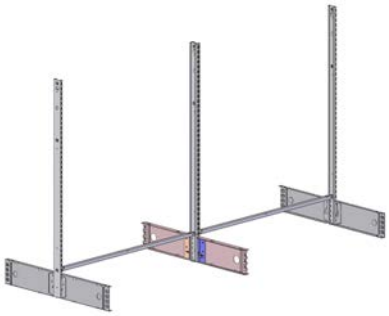

3

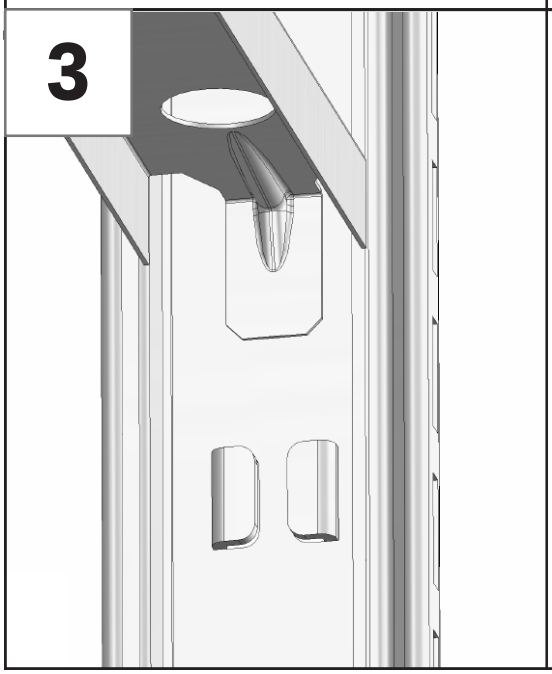

Next, install the tie bar by sliding it into place as pictured to the left. You may need to tap the tiebar to properly secure it.

Note: With your mallet tap the tie bar directly over the tab to properly seat it.

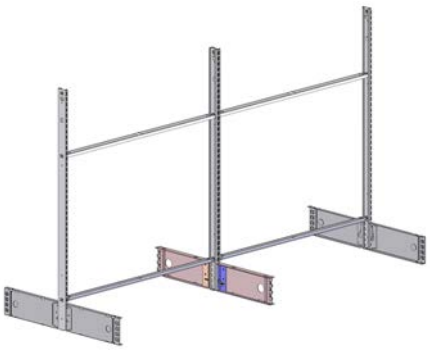

ULTRA 25K GONDOLA ASSEMBLY

Back Panels, top cap, kick plate

4

4

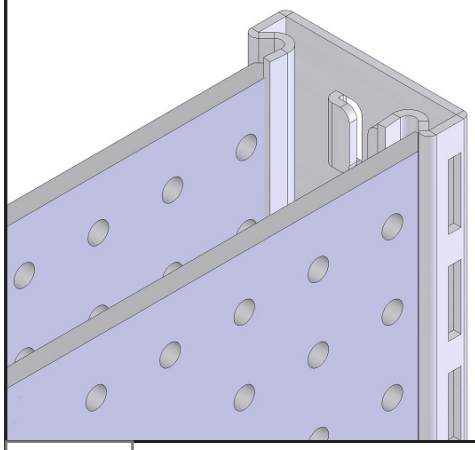

Install the back panel by inserting it into the channels slightly above the tie bar and slide it down the channels on the uprights as shown to the left. When installed the back panel should rest in the cross tie channel.

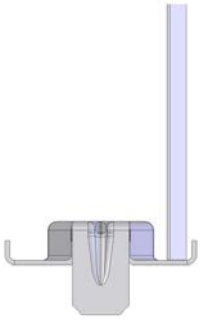

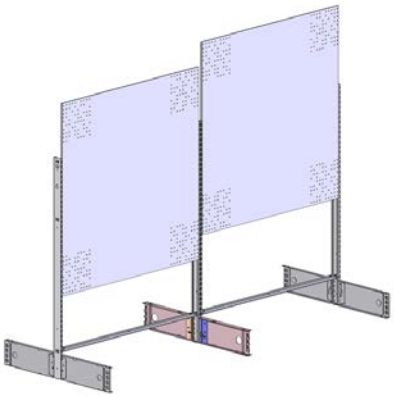

5

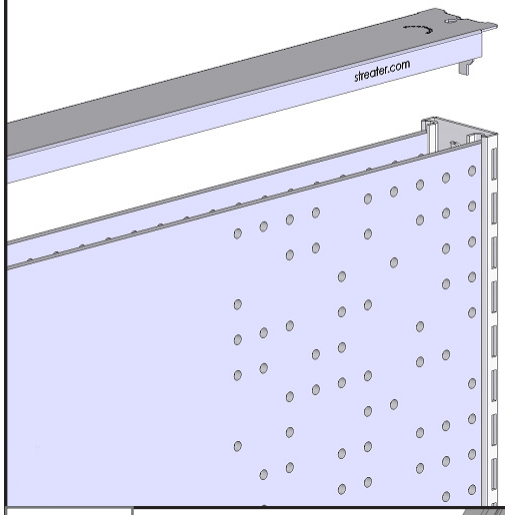

Slide the top cap over the back panels and tap with your hand to seat it. When seated the topcap should be flush across the top.

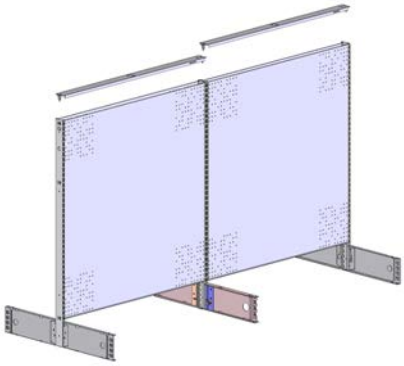

6

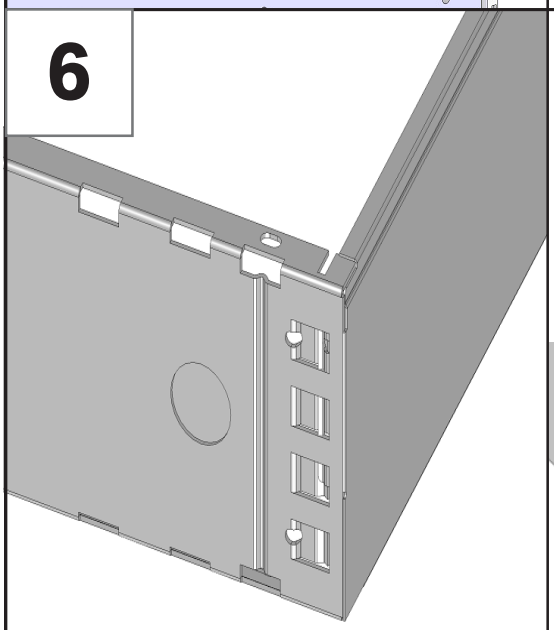

Align the kick plate tabs with the fingers of the bottom arms. Tap kick plate with your hand or a mallet to seat the tabs securely in the fingers of the bottom arm. Repeat step for opposite side.

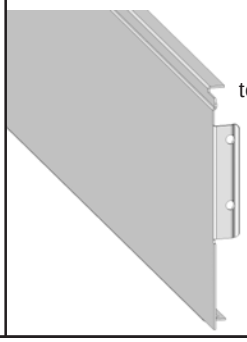

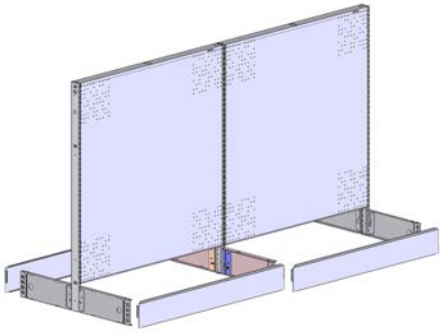

STREATER
A Marmon Retail Services® Company

R03-28-06 - Form No.08335-0106

7

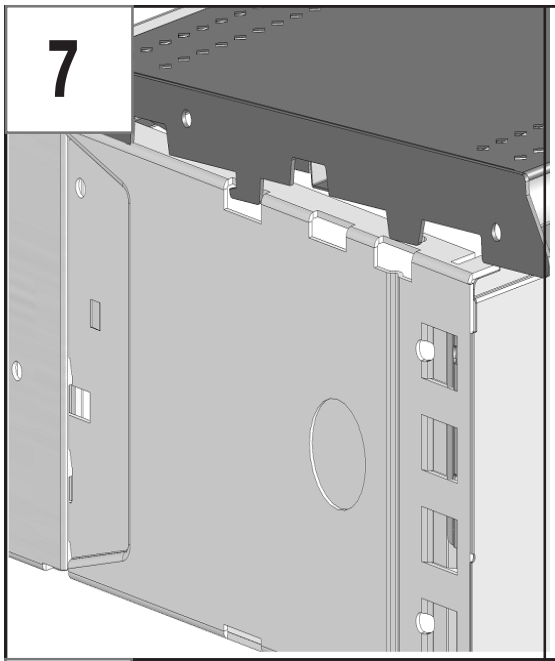

Tip the deck up slightly and slide it into the slots on the bottom arms. When installed correctly the deck should not tip forward when you push on the front of the deck. Repeat this step for opposite side.

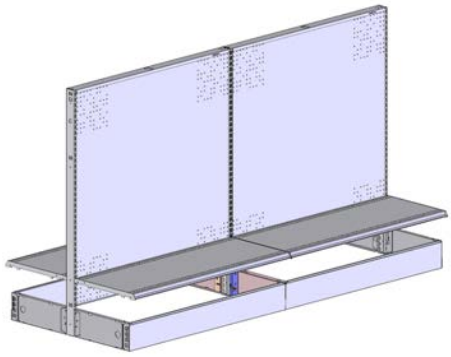

8

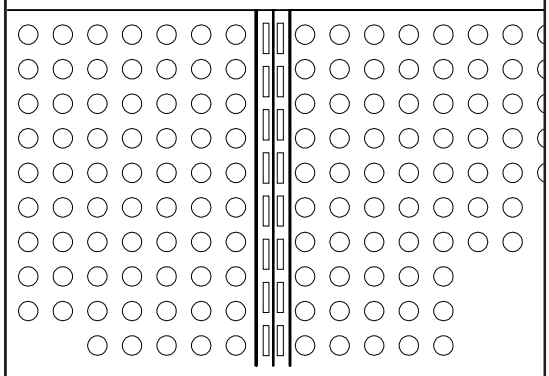

WALLCASE AND GONDOLA MUST BE LEVEL!

Start leveling from the high point on the floor and go out each way. Run must be level both vertically and horizontally.

STABILITY OF FIXTURE WITH LEVELERS DEMANDS THAT LEVELERS BE ADJUSTED OUT NO FURTHER THAN 1-1/2".

WRONG

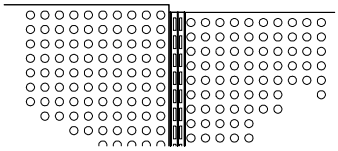

UNIT LEVEL

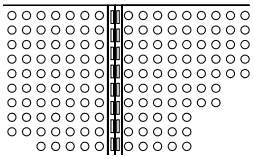

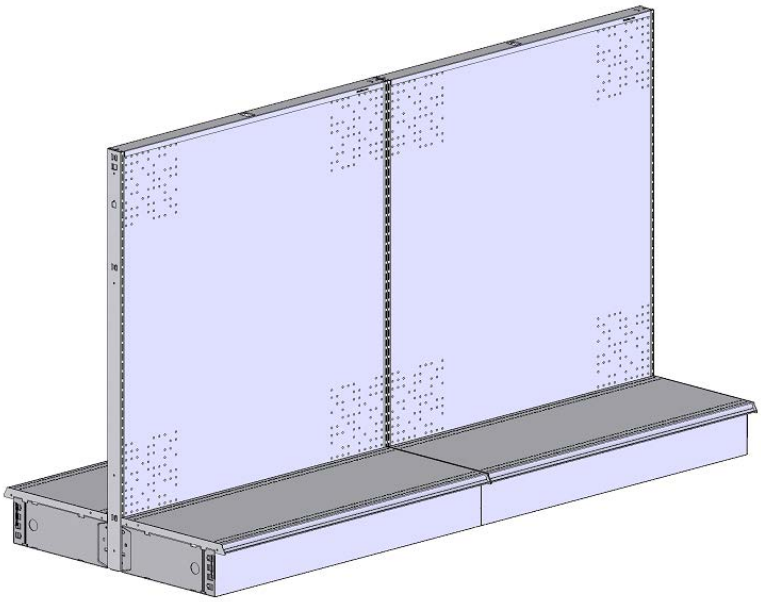

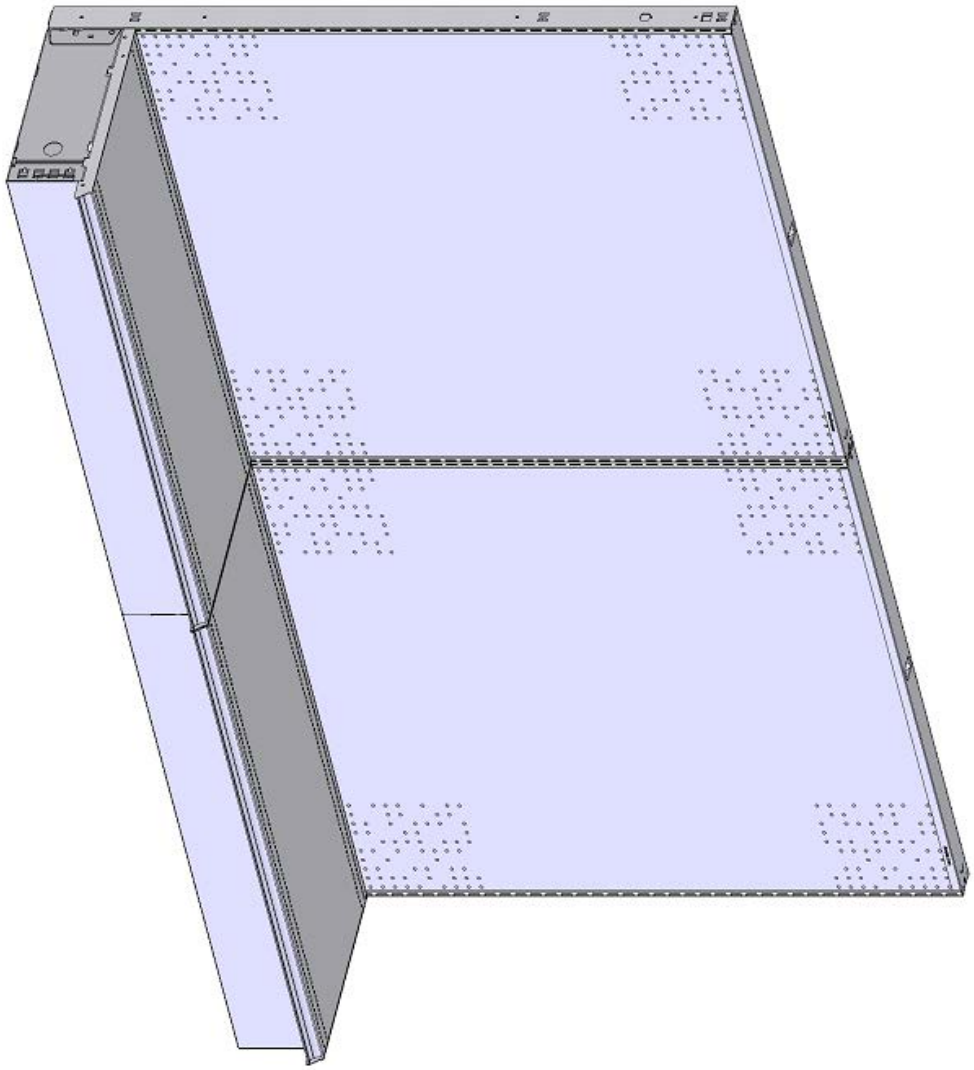

STREATER
A Marmon Retail Services® Company

R03-28-06 - Form No.08335-0106

ULTRA 25K WALLCASE ASSEMBLY

ULTRA 25K WALLCASE ASSEMBLY

Bottom arms, cross tie, tie bar

1

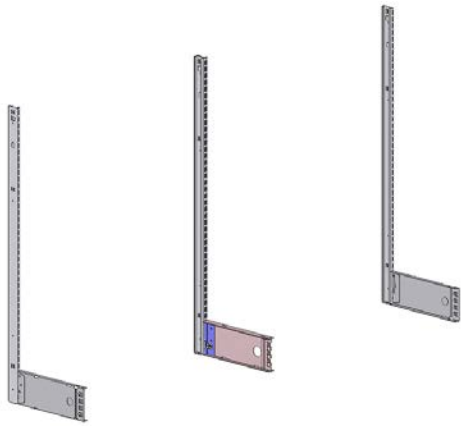

With the left upright (smooth side out) in hand, take the left hand bottom arm (smooth side out) then slide it into the upright and push down to seat the hooks.

To lock the bottom arm into place use a mallet and tap the locking key into the corresponding slot in the upright.

Repeat step with right side components.

Unlocked

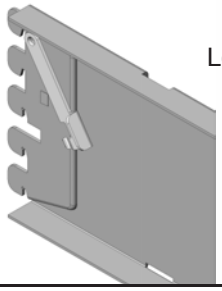

Locked

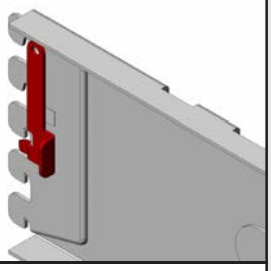

2

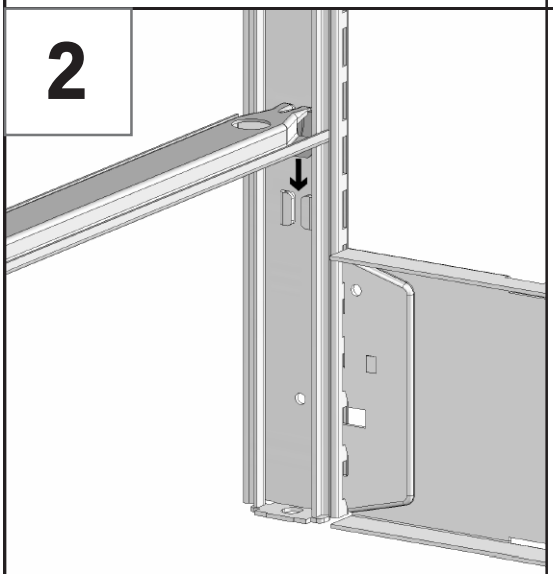

Slide the cross tie into place on one upright and then the other as pictured to the left.

Note: With your mallet tap the cross tie directly over the tab to properly seat it.

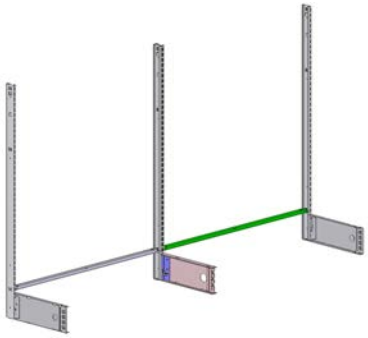

3

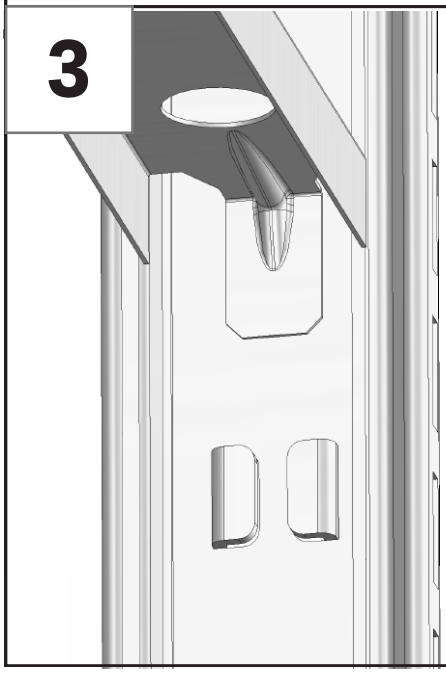

Next, install the tie bar by sliding it into place as pictured to the left. You may need to tap the tiebar to properly secure it.

Note: With your mallet tap the tie bar directly over the tab to properly seat it.

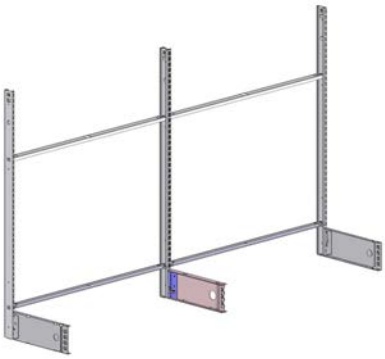

ULTRA 25K WALLCASE ASSEMBLY

Back Panels, top cap, kick plate

4

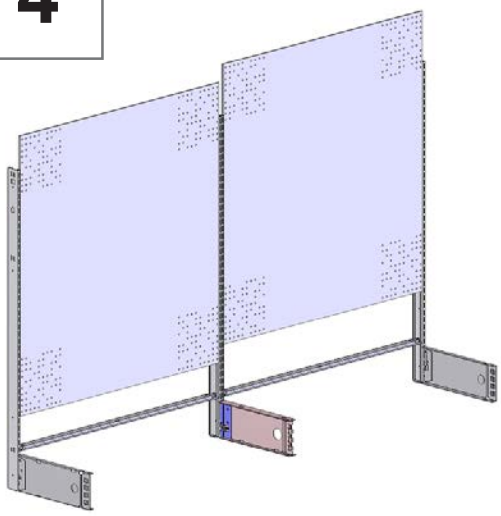

Install the back panel by inserting it into the channels slightly above the tie bar and slide it down the channels on the uprights as shown to the left. When installed the back panel should rest in the cross tie channel.

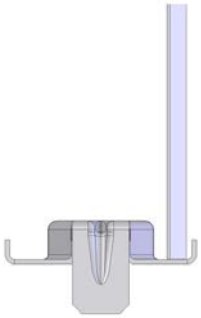

5

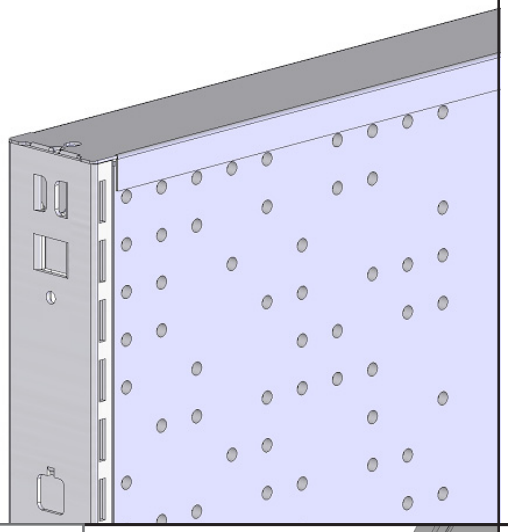

Slide the top cap over the back panels and tap with your hand to seat it. When seated the topcap should be flush across the top.

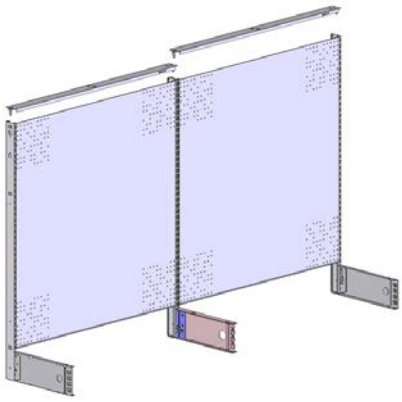

6

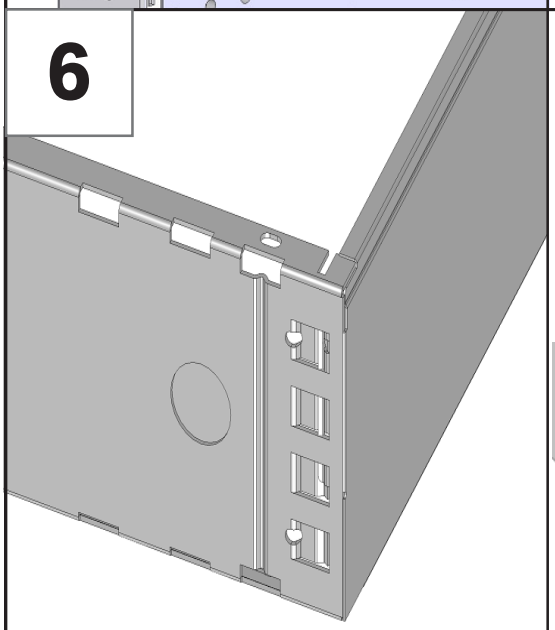

Align the kick plate tabs with the fingers of the bottom arms. Tap kick plate with your hand or a mallet to seat the tabs securely in the fingers of the bottom arm. Repeat step for opposite side.

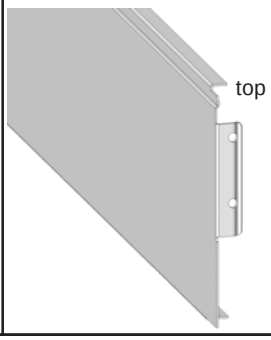

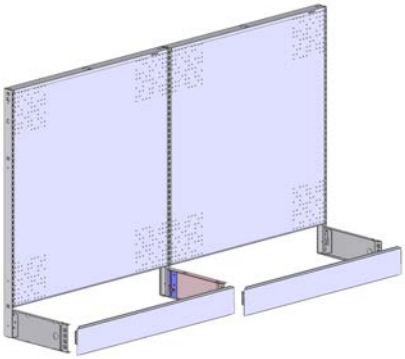

7

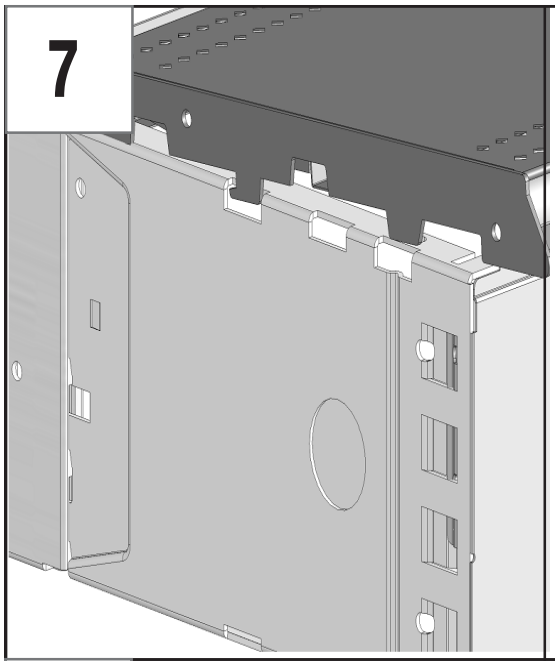

Tip the deck up slightly and slide it into the slots on the bottom arms. When installed correctly the deck should not tip forward when you push on the front of the deck. Repeat this step for opposite side.

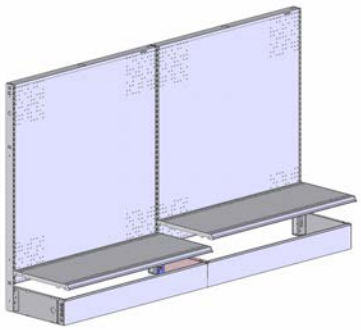

8

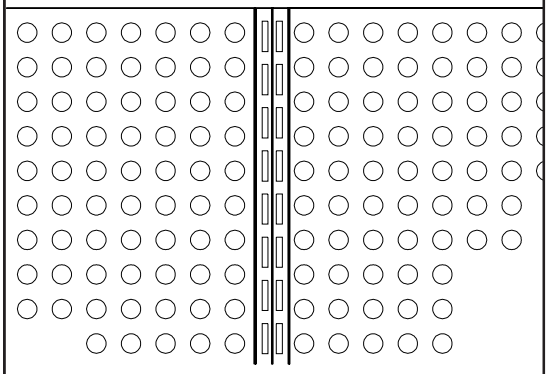

WALLCASE AND GONDOLA MUST BE LEVEL!

Start leveling from the high point on the floor and go out each way. Run must be level both vertically and horizontally.

STABILITY OF FIXTURE WITH LEVELERS DEMANDS THAT LEVELERS BE ADJUSTED OUT NO FURTHER THAN 1-1/2".

WRONG

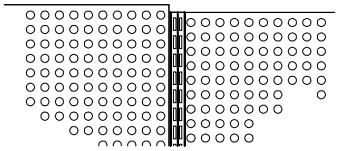

UNIT LEVEL

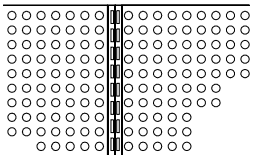

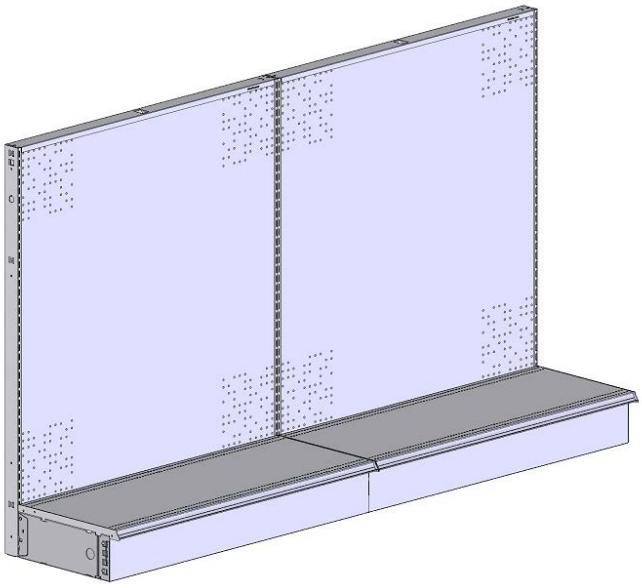

LEVELING AND ANCORING

Start leveling from the high point on the floor and go out each way. Run must be level both vertically and horizontally.

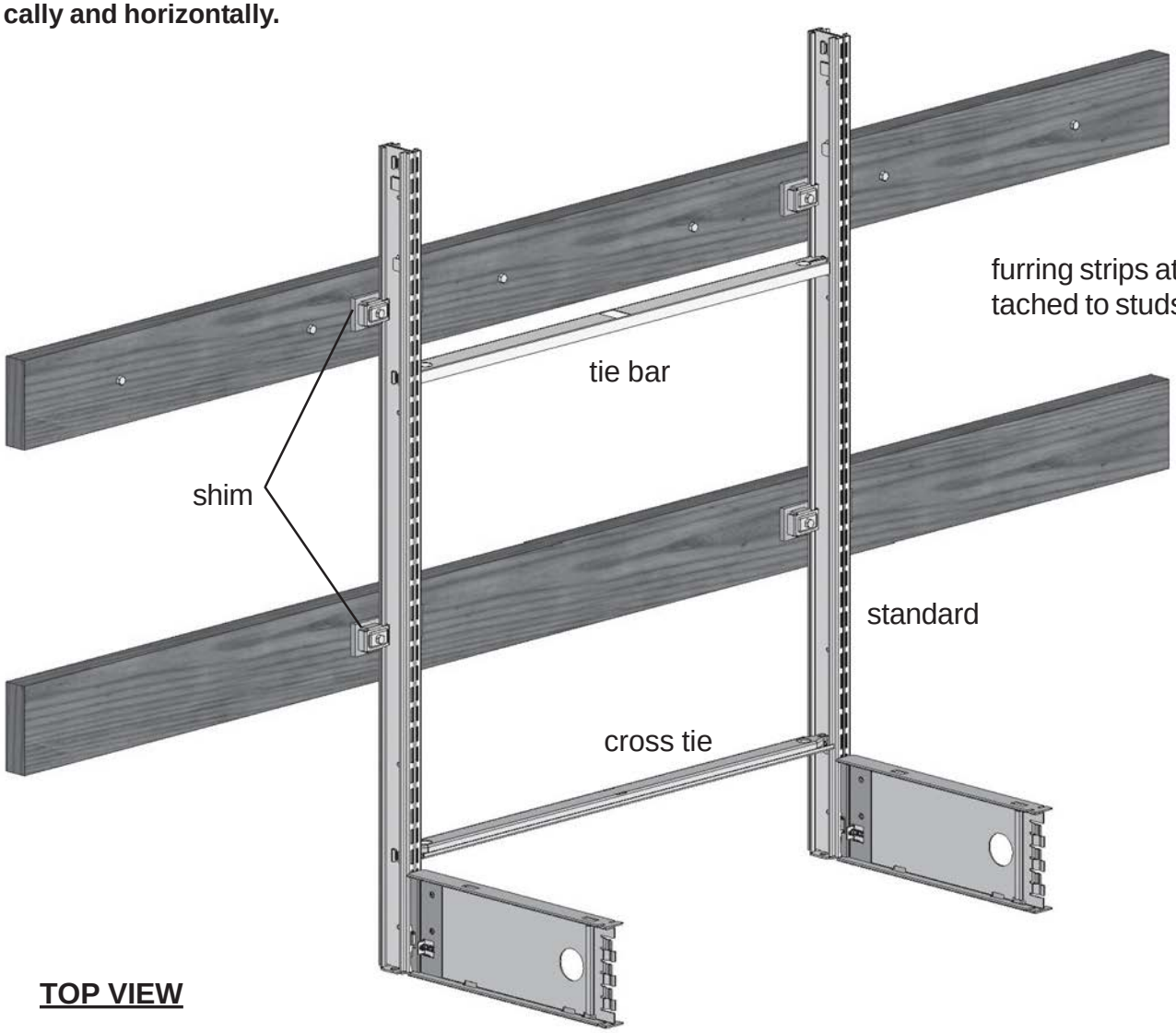

TOP VIEW

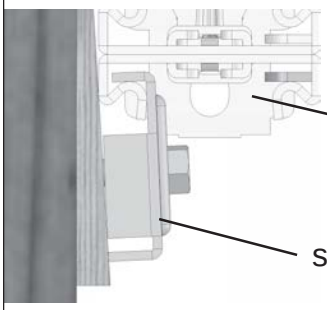

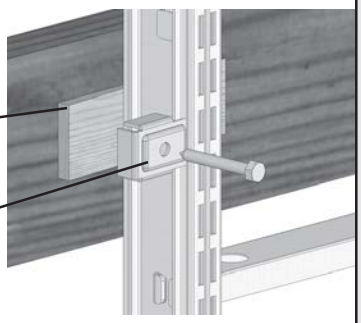

ATTENTION!

1.) Make sure wallcase is level and plum before anchoring to the wall.
2.) It is recommended to have a standard tie bracket 30”-36” from the floor when the standard is 108” or higher.
3.) Irregular walls and floors may make it necessary to shim beneath bottom arms and behind standards. After shimming, make sure bottom arms are square with standard and crosstie.
4.) Attach all units to the wall with standard tie bracket 10”-12” from the top of the standard
5.) Nails are not acceptable as fasteners for anchoring standards.

STREATER
A Marmon Retail Services® Company
R03-28-06 - Form No.08335-0106

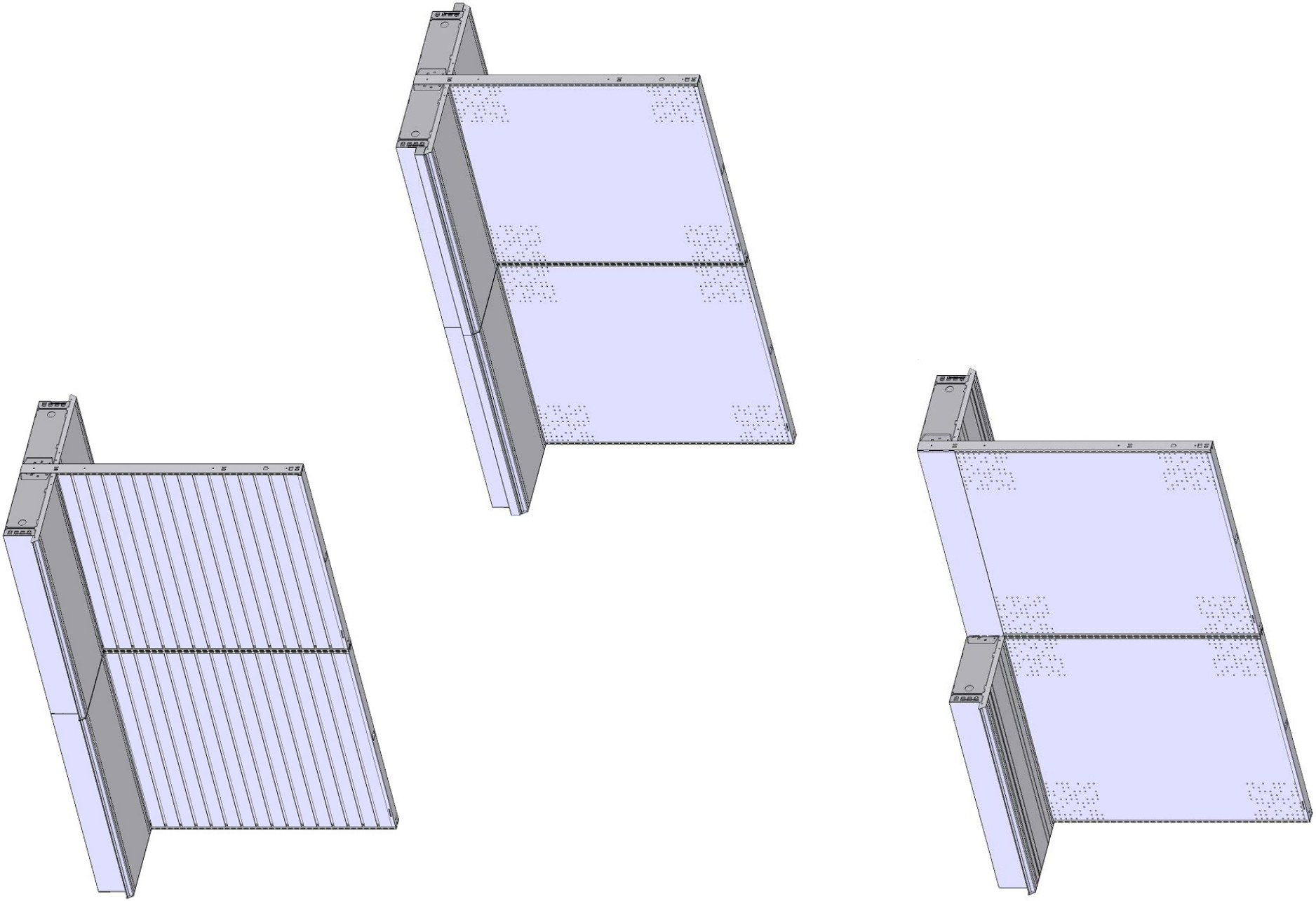

STREATER
A Marmon Retail Services® Company

R03-28-06 - Form No.08335-0106

MISCELLANEOUS ASSEMBLY

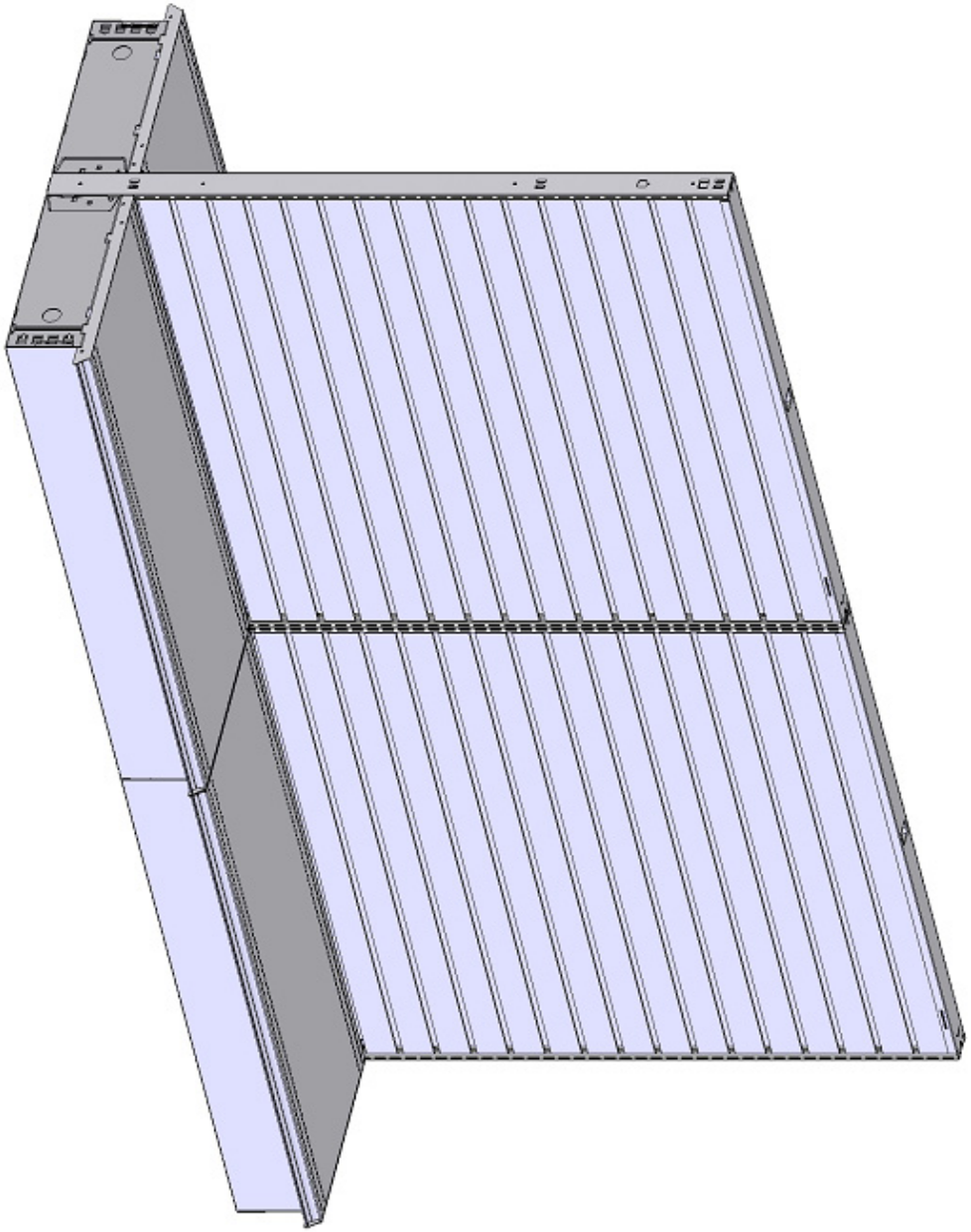

STREATER
A Marmon Retail Services® Company
R03-28-06 - Form No.08335-0106

SLATWALL BACK PANEL ASSEMBLY

Full drawing

SLATWALL BACK PANEL ASSEMBLY

Slatwall tie bar, slatwall back panel, top cap

SW1

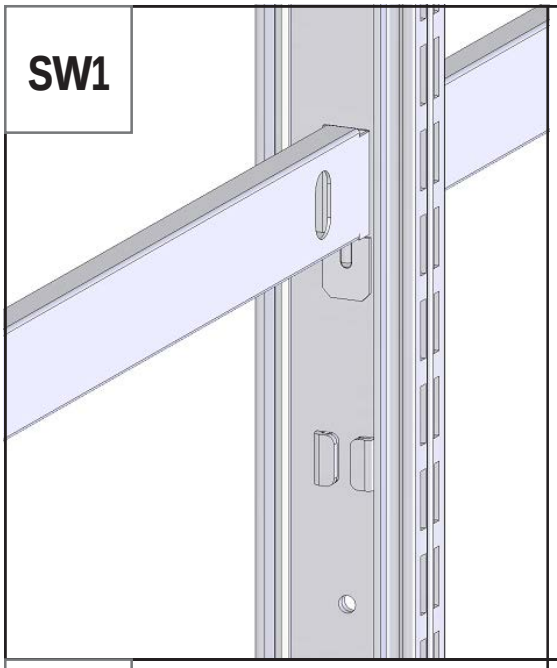

Install the slatwall tie bar by sliding it into place as pictured to the left. You may need to tap the slatwall tiebar to properly secure it.

Note: With your mallet tap the slatwall tie bar directly over the tab to properly seat it.

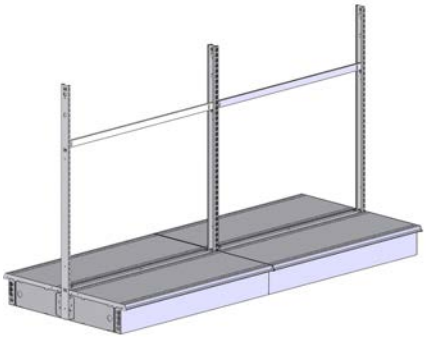

SW2

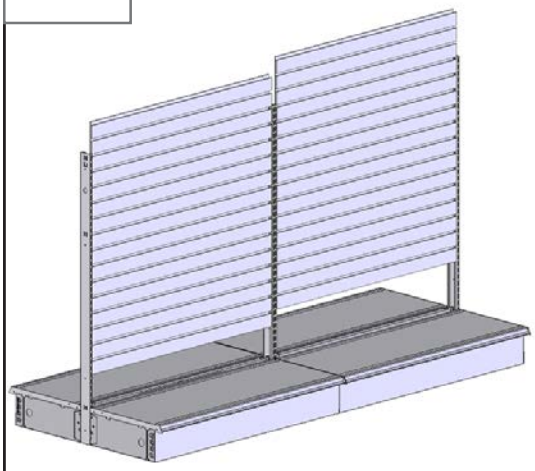

Install the slatwall back panel by inserting it into the channels slightly above the tie bar and slide it down the channels on the uprights as shown to the left. When installed the slatwall back panel should rest in or on the cross tie channel as shown below.

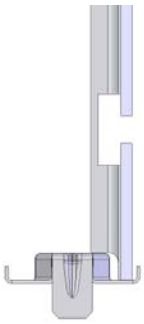

Inserts into cross tie

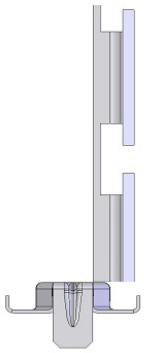

Sits on top of cross tie

SW3

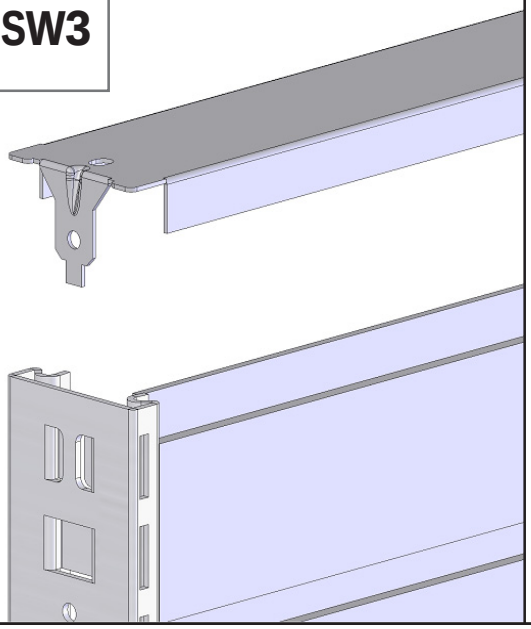

Slide the top cap over the slatwall back panels and tap with your hand to seat it. When seated the topcap should be flush across the top.

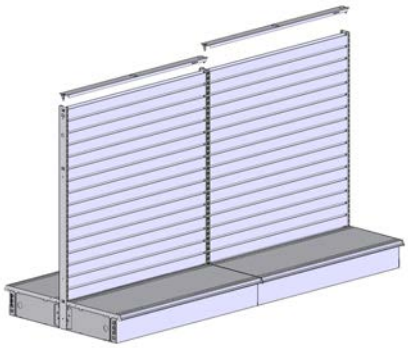

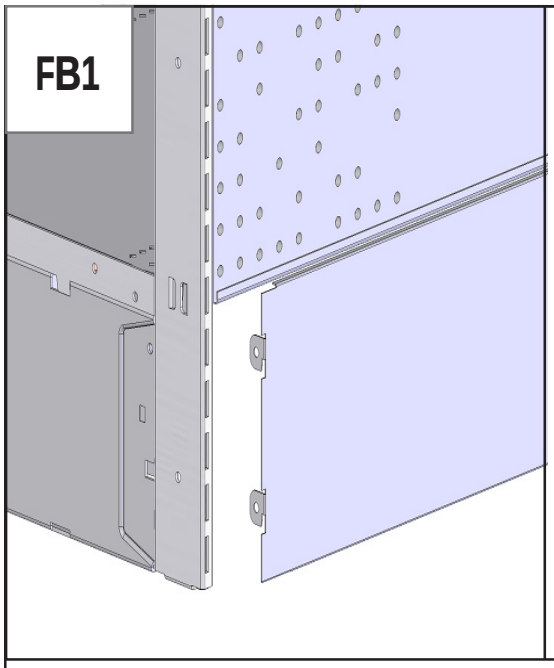

Install the flush base by centering it with the unit and sliding it into the standard slotting as pictured to the left.

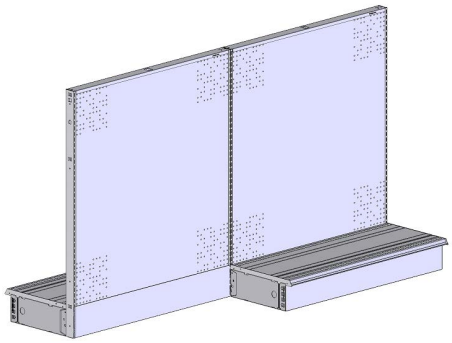

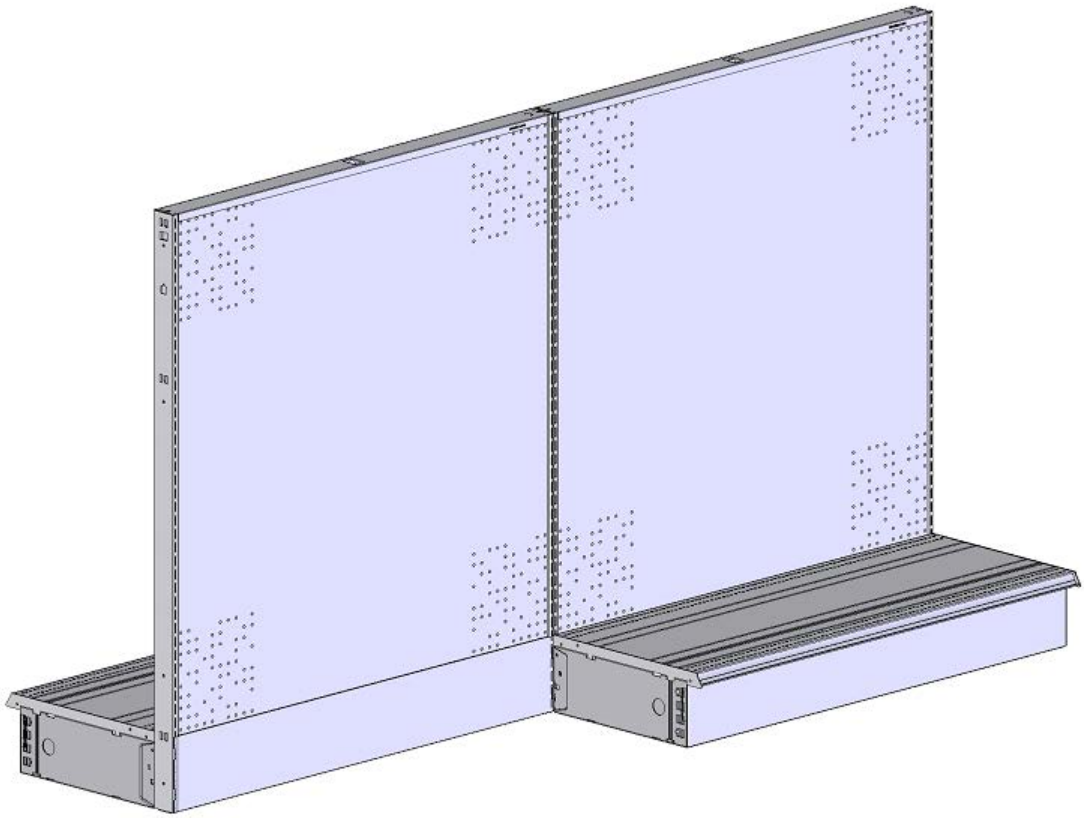

FLUSH BASE ASSEMBLY

Flush Base

TG1

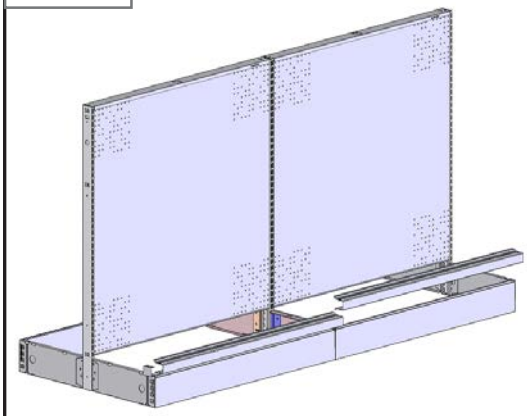

Slide the base nose over the kick plate so the ends are flush with the bottom arms and the the channel on the base nose is seated completely.

Next, snap the base nose end caps on each end of the base nose so that they are flush. The base nose caps go on each end of a gondola run.

Repeat this step for the opposite side.

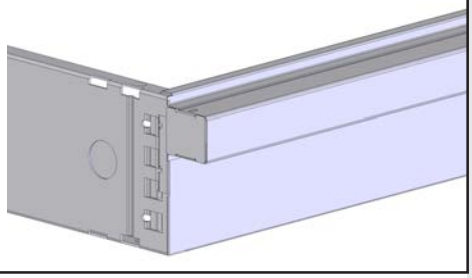

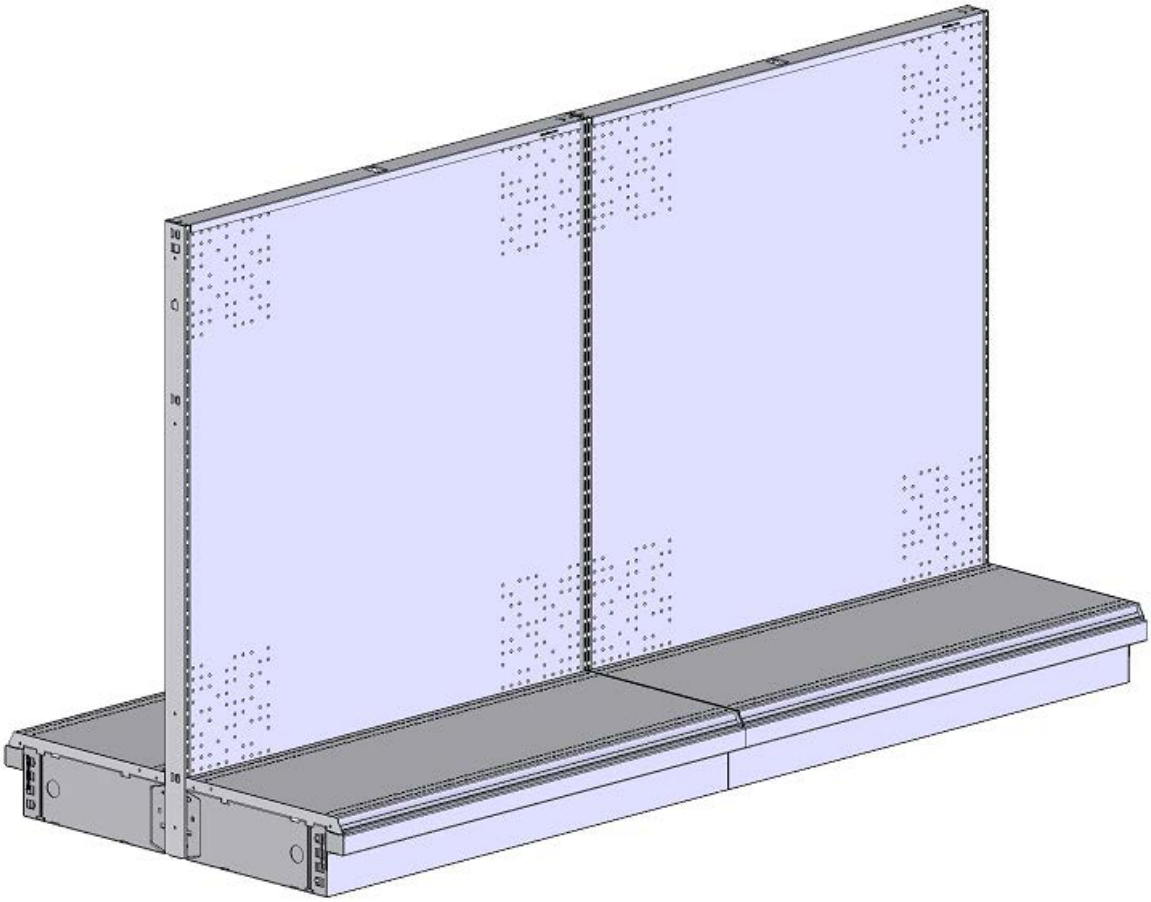

TRIM GUARD ASSEMBLY 12

Trim guard, trim guard caps

SB1

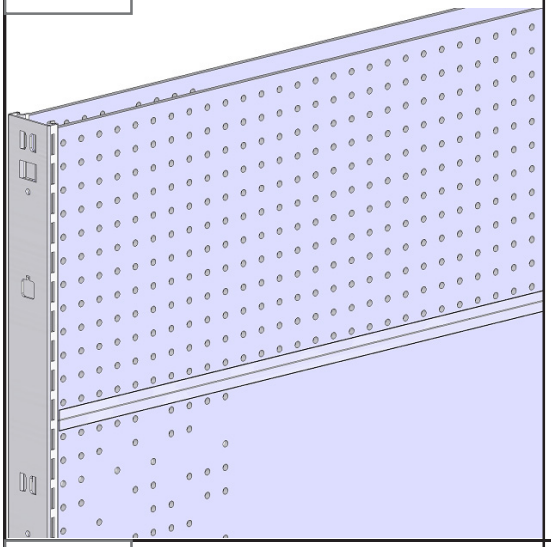

Install the first back panel by inserting it into the channels slightly above the tie bar and slide it down the channels on the uprights as shown to the left. When installed the back panel should rest in the cross tie channel. Now place the H-channel on the inserted back panel and last insert the second back panel.

H-channel
SIDE VIEW

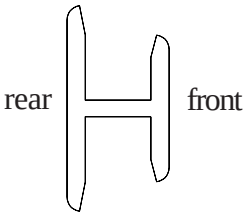

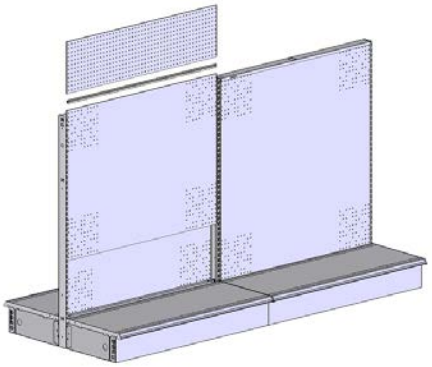

SB2

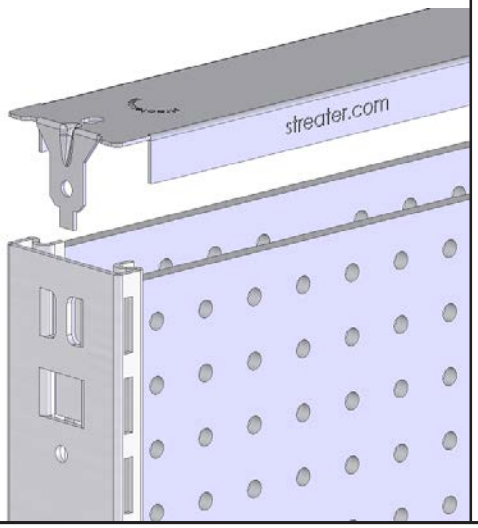

Slide the top cap over the back panels and tap with your hand to seat it. When seated the topcap should be flush across the top.

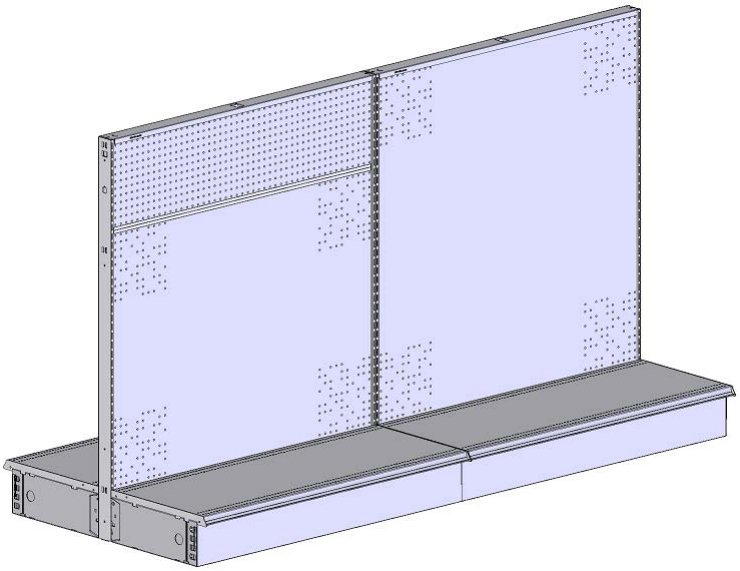

SPLIT BACK ASSEMBLY 13

Back Panels, top cap , h-channel

STREATER
A Marmon Retail Services® Company
R03-28-06 - Form No.08335-0106

OPTIONAL STABILIZER STRAP ASSEMBLY

Center and end stabilizer straps

SS1

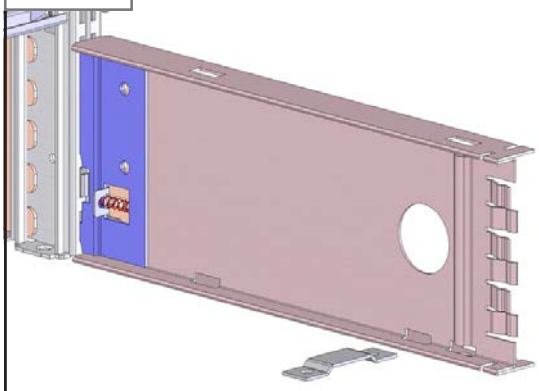

Slide the center stabilizer strap into the center bottom arm as pictured to the left and below. Secure the strap with the appropriate floor anchors.

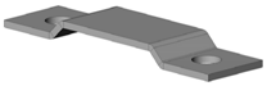

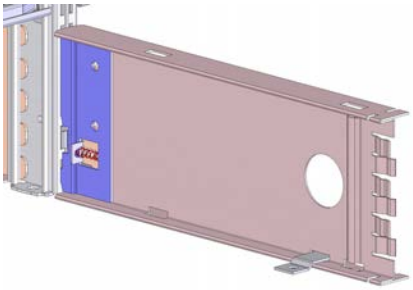

SS2

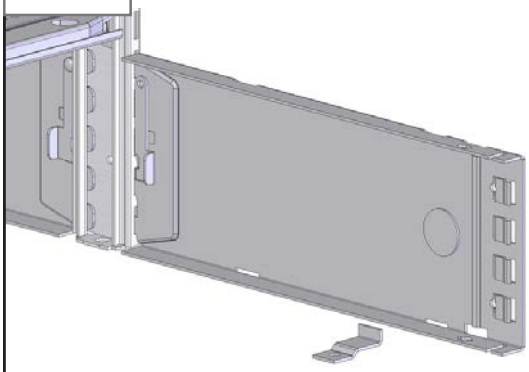
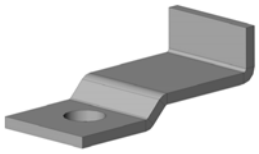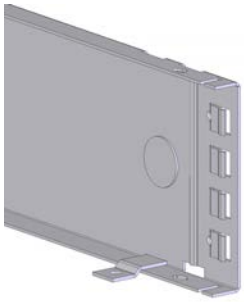
Slide the end stabilizer strap into the end bottom arm as pictured to the left and below. Secure the strap with the appropriate floor anchors.